TTC-2PWG

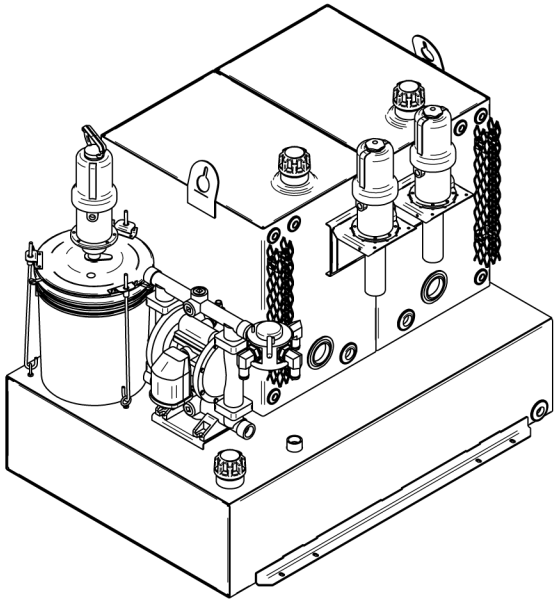

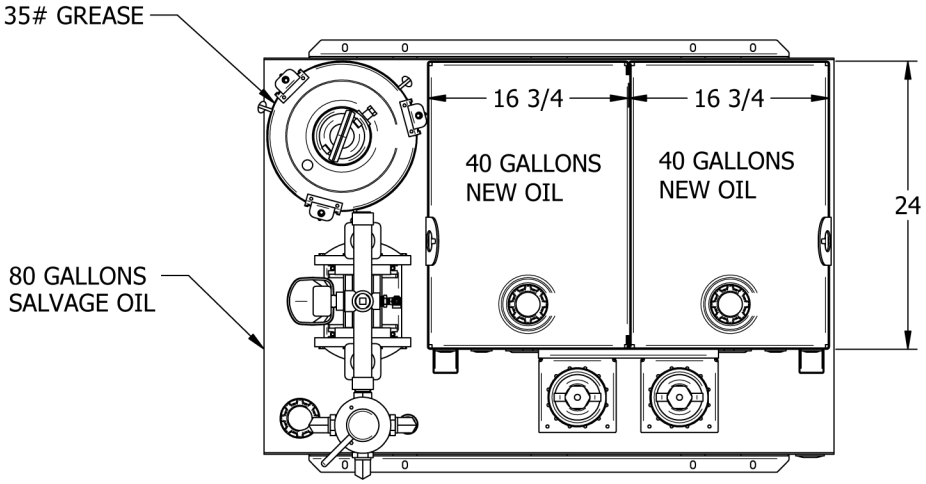

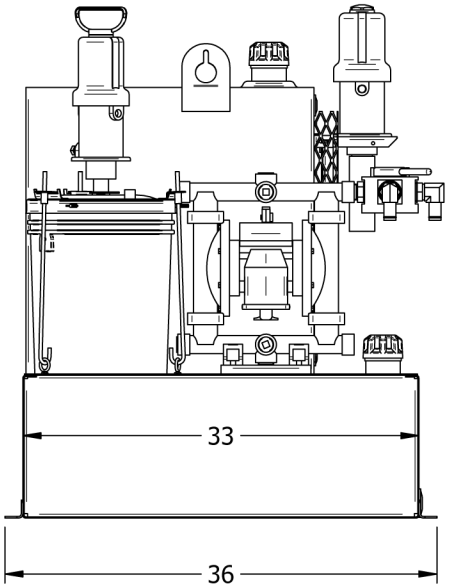

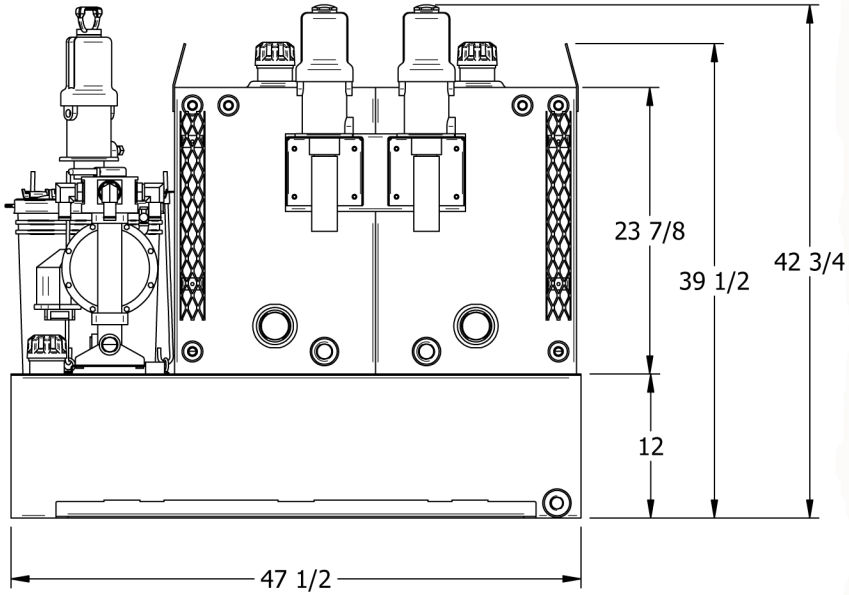

TexasTruckCenter.com
10555 Cypress Creek Pkwy
Houston, TX 77070
Toll Free: 800-700-6601

TTC-2PWG

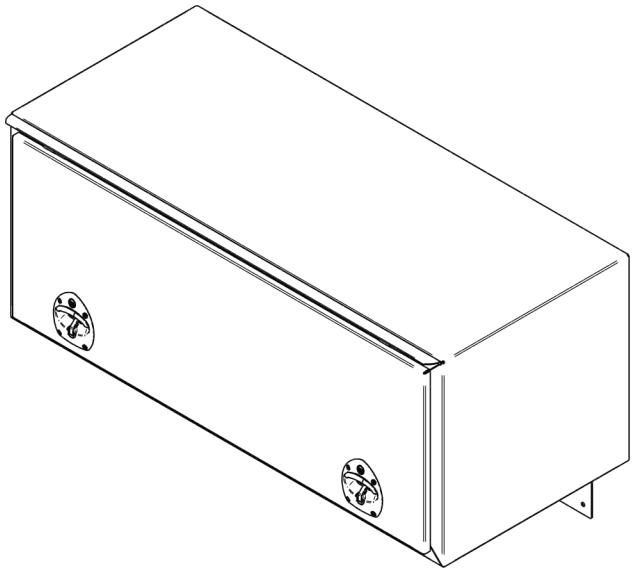

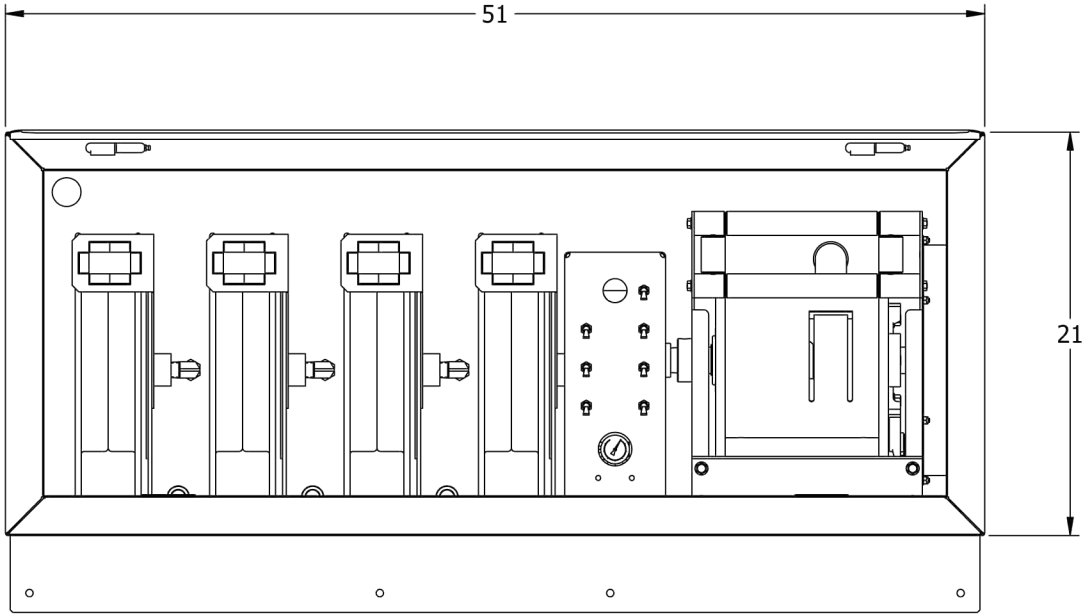

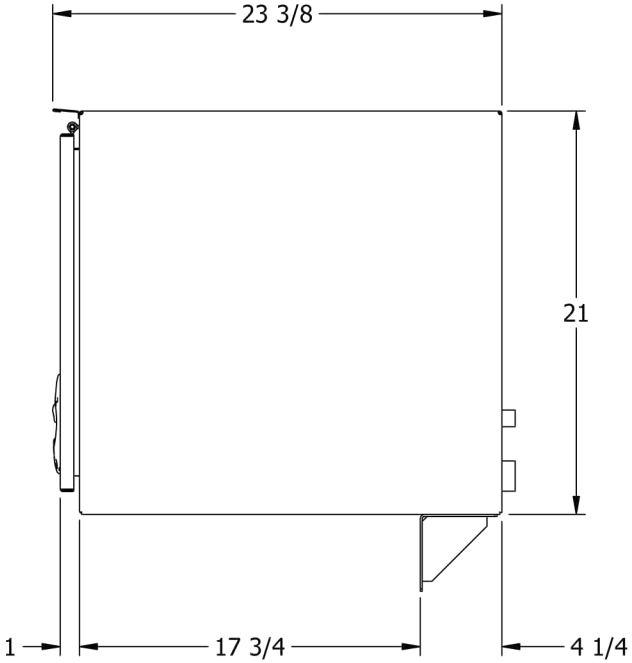

TexasTruckCenter.com
10555 Cypress Creek Pkwy
Houston, TX 77070
Toll Free: 800-700-6601