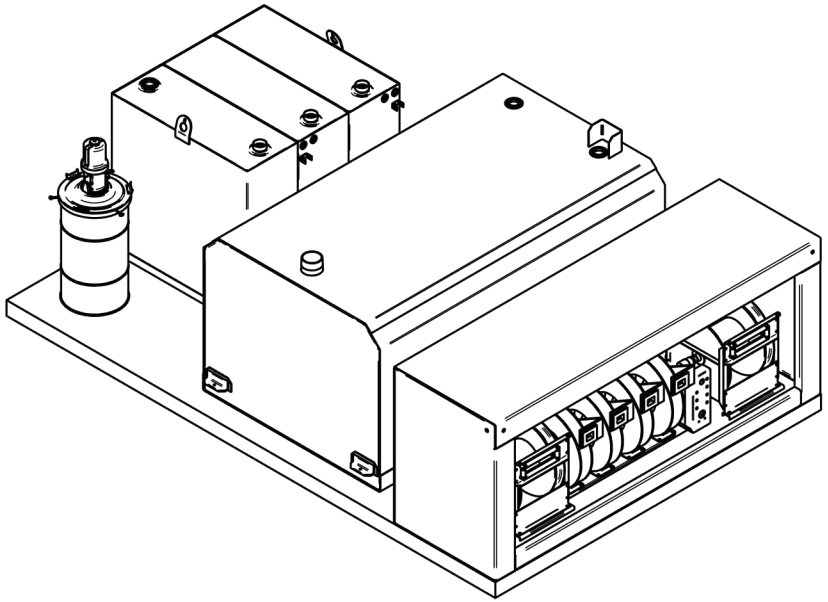

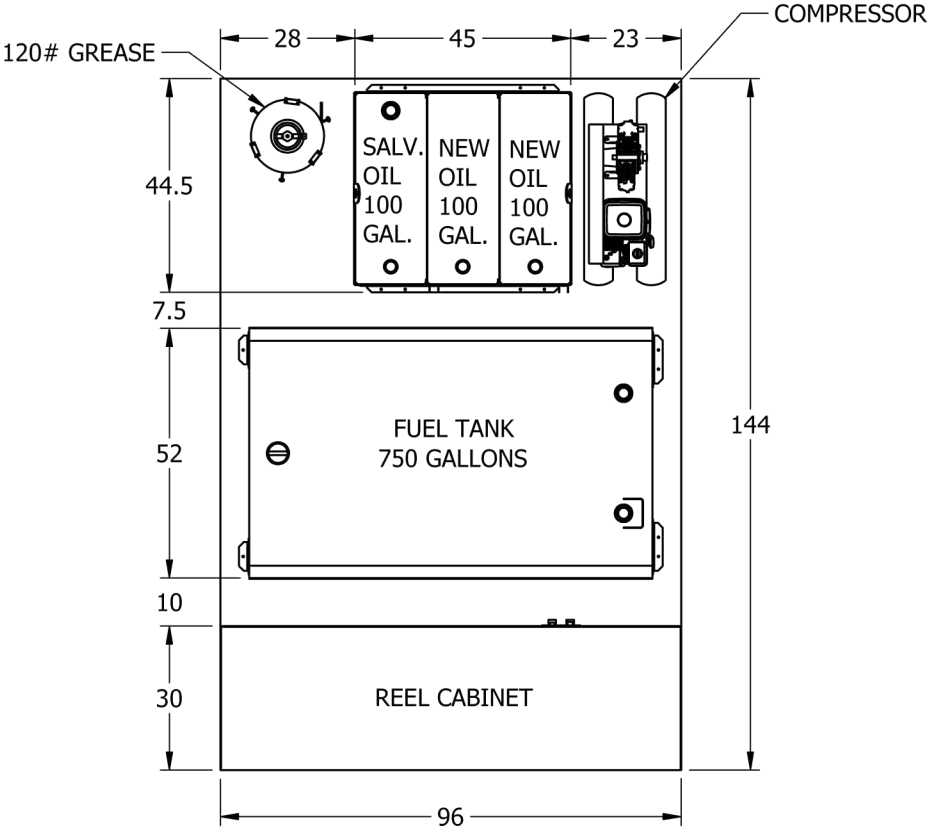

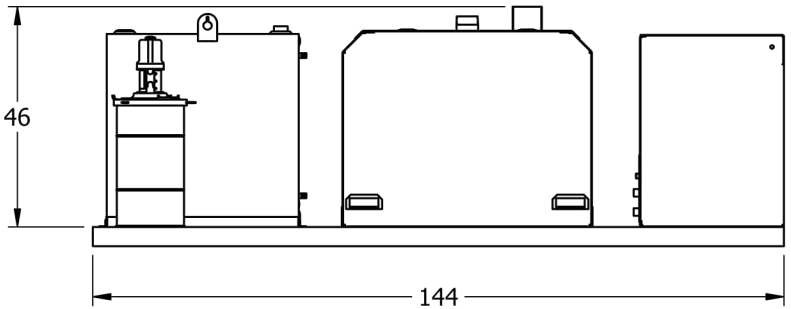

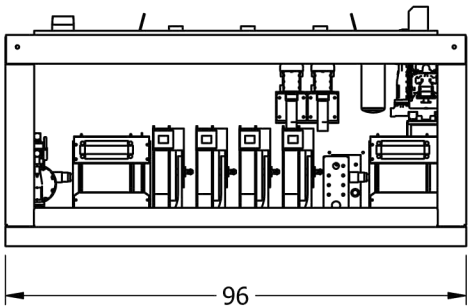

TexasTruckCenter.com
10555 Cypress Creek Pkwy
Houston, TX 77070
Toll Free: 800-700-6601

Fuel & Lube
TTC-750F-2P-W-G

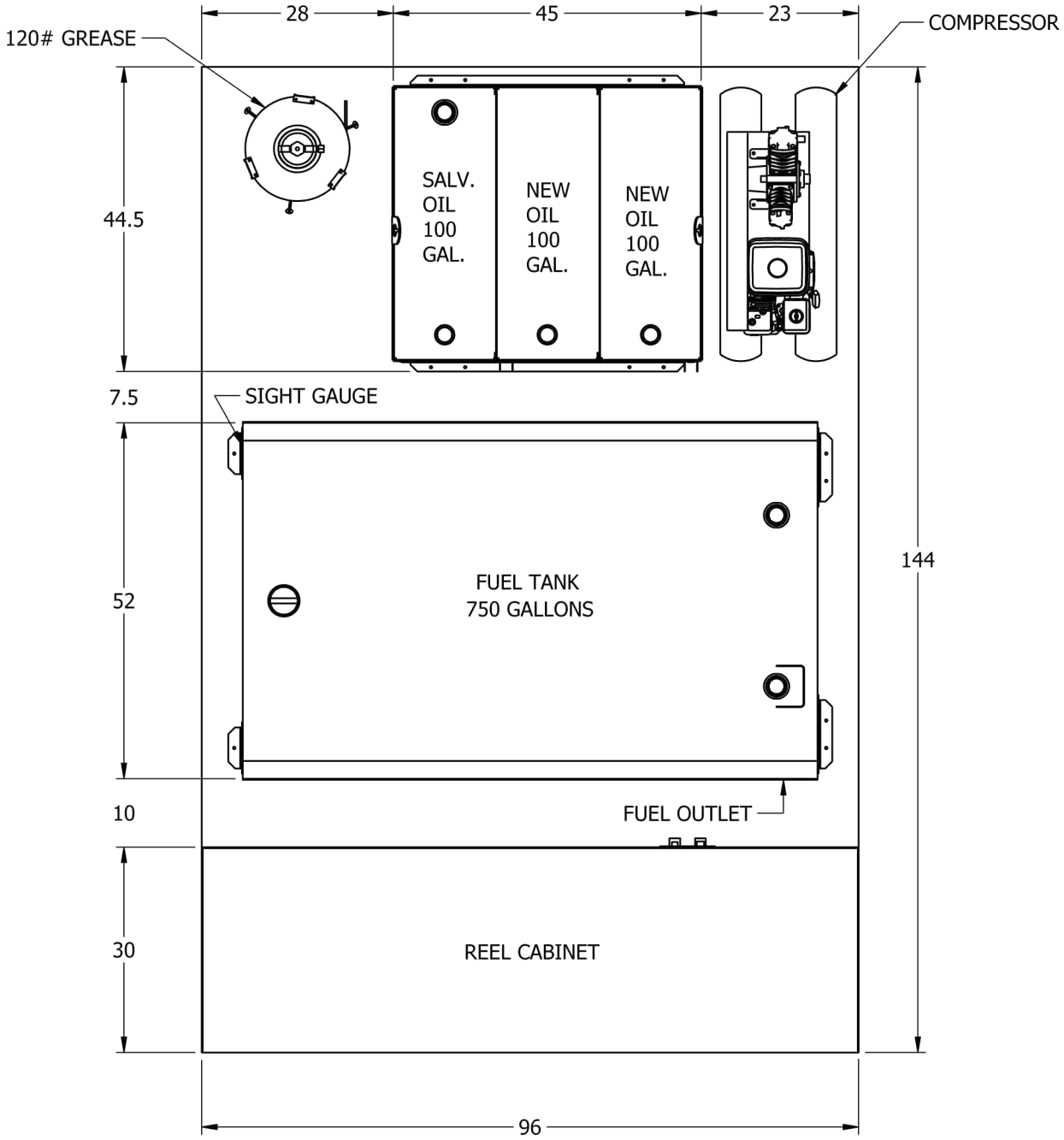

TexasTruckCenter.com
10555 Cypress Creek Pkwy
Houston, TX 77070
Toll Free: 800-700-6601