APPROVED BY _____ DATE _____ PAINT CODE YZ OXFORD WHITE

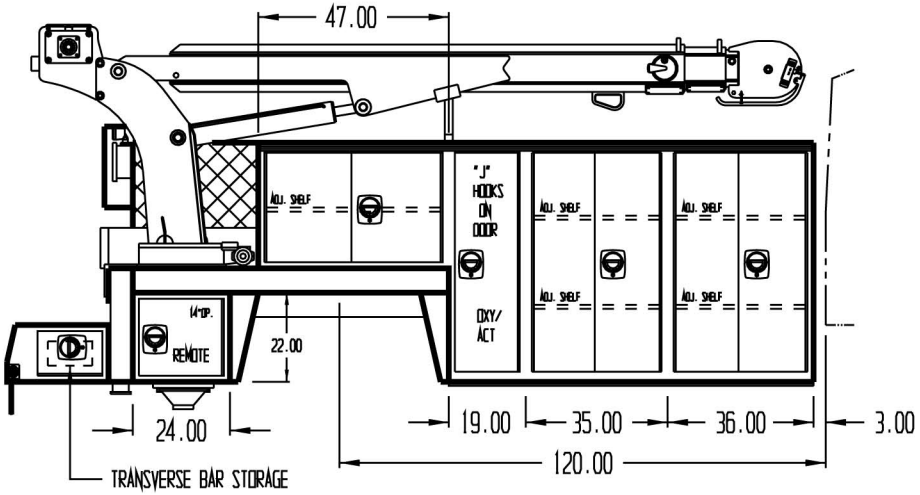

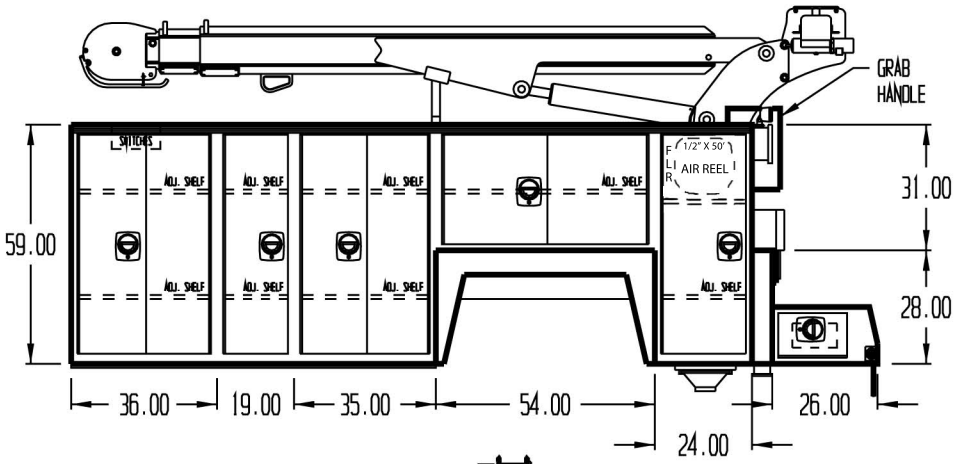

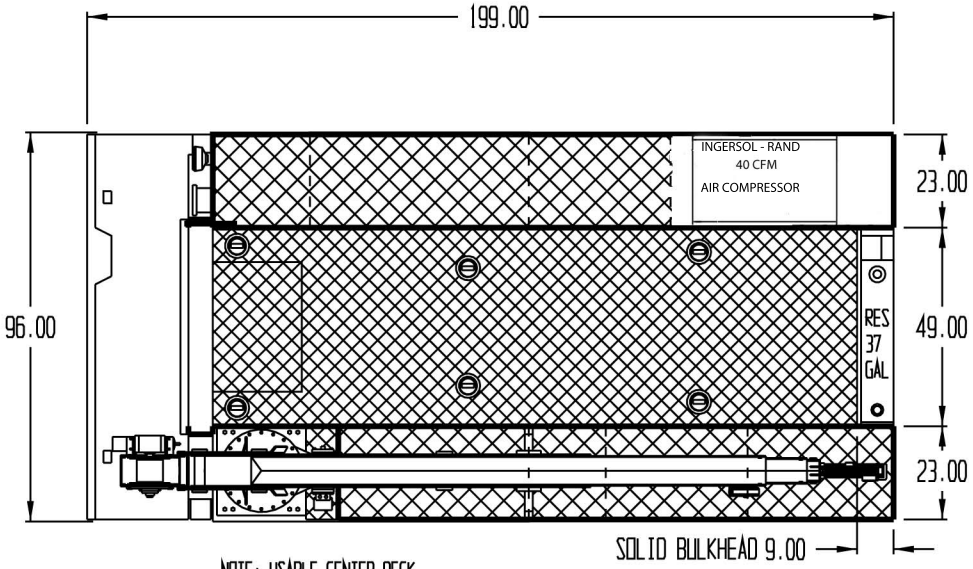

NOTE: USABLE CENTER DECK CARGO WIDTH 48.50"

NOTE: 8" SILLS & 4" X-MEMBERS

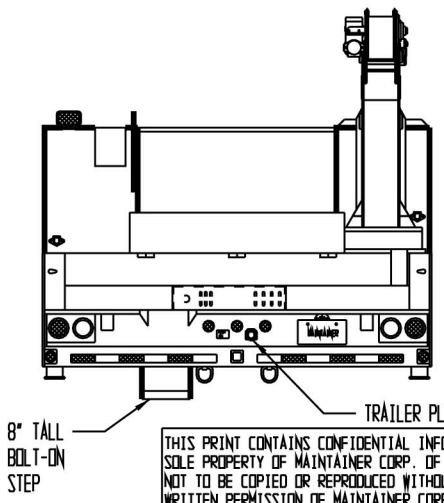

PLEASE REPORT ANY ERRORS FOUND ON THIS PRINT

THIS PRINT CONTAINS CONFIDENTIAL INFORMATION AND IS THE SOLE PROPERTY OF MAINTAINER CORP. OF IOWA INC. AND IS NOT TO BE COPIED OR REPRODUCED WITHOUT THE EXPRESSED WRITTEN PERMISSION OF MAINTAINER CORP. OF IOWA INC.

PROPRIETARY DATA PROPERTY OF MAINTAINER CORPORATION OF IOWA, INC.

COPYRIGHT © 2000

UOS DIMENSIONS ARE IN INCHES
GENERAL TOLERANCES

BREAK ALL EDGES .01 X 45°	ANGULAR ± 1° .XX ± .03 .XXX ± .005
UOS RADII	UOS ANGLES

MATERIAL:

SCALE: 1:32 SIZE: B

DRAWING NUMBER: Z402

DFTM. KJB DATE: 8/8/08

MADE IN THE USA

10000TT-2-120 HOUSTON AUTOMOTIVE GROUP

Maintainer
Corporation of Iowa, Inc.
P.O. Box 349 1701 S. 2nd Avenue
Sheldon, Iowa 51201