APPROVED BY: _____ DATE: _____ PAINT CODE: __9219 WHITE_____ WELDER TYPE___MILLER BOBCAT 250

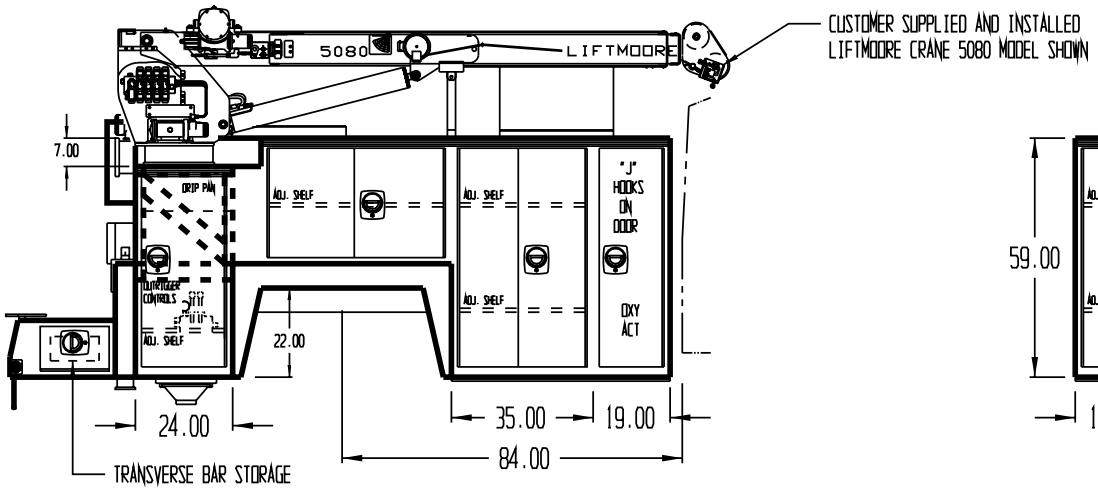

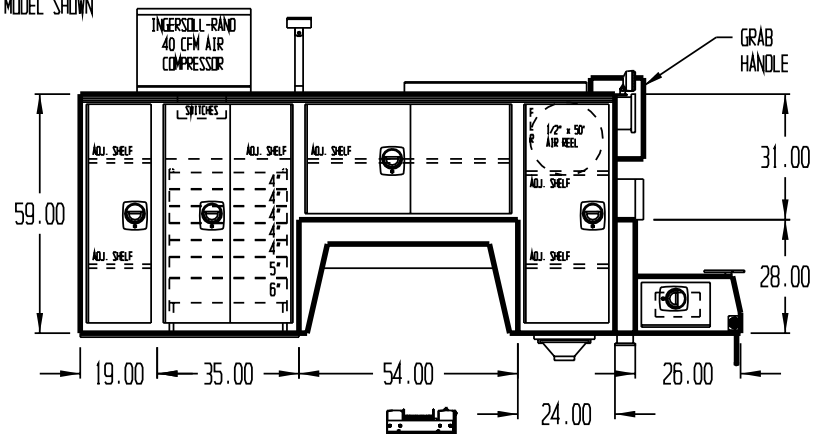

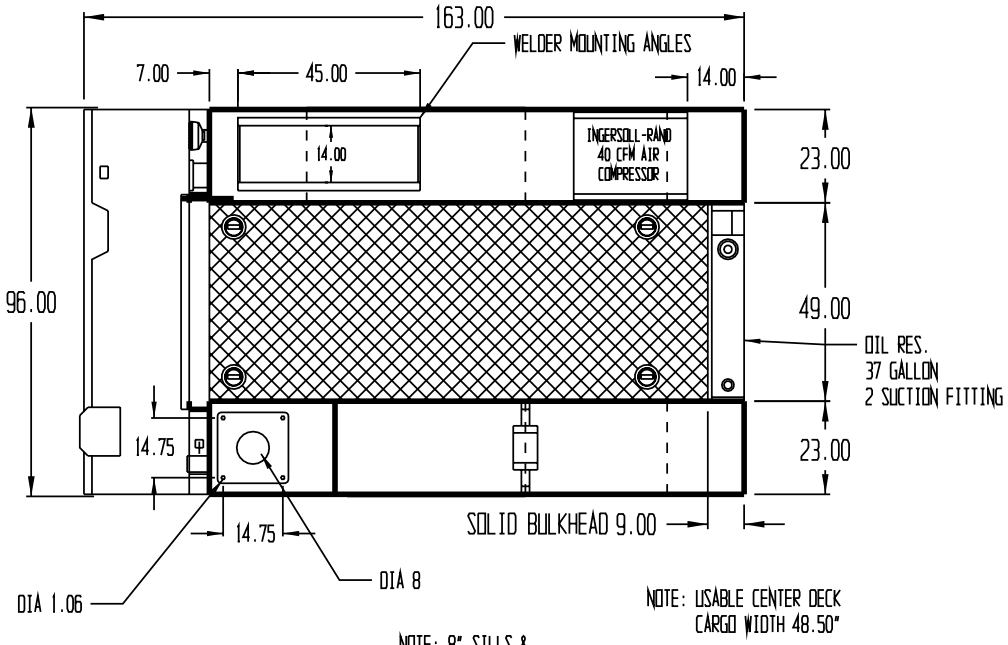

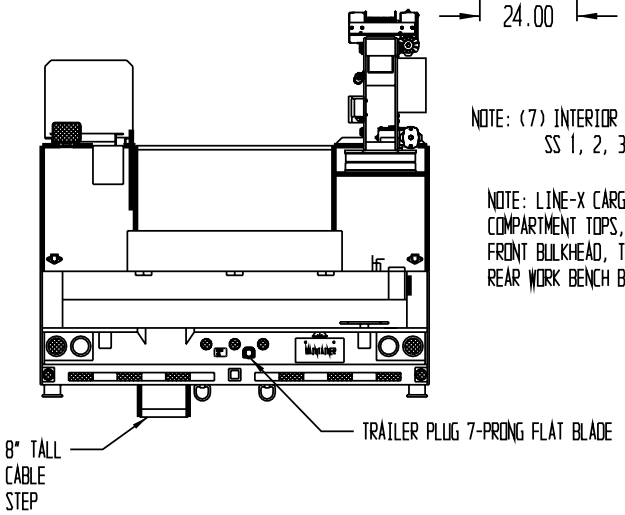

NOTE: (7) INTERIOR PETERSON LIGHTS #391
SS 1, 2, 3, 4 & CS 2, 3, 4

NOTE: LINE-X CARGO CENTER DECK,
COMPARTMENT TOPS, SIDES, (NOT BACKS),
FRONT BULKHEAD, TAIL GATE, &
REAR WORK BENCH BUMPER, AND STEP

(Y185-Y186)

THIS PRINT CONTAINS CONFIDENTIAL INFORMATION AND IS THE SOLE PROPERTY OF MAINTAINER CORP. OF IOWA INC. AND IS NOT TO BE COPIED OR REPRODUCED WITHOUT THE EXPRESSED WRITTEN PERMISSION OF MAINTAINER CORP. OF IOWA INC.

PROPRIETARY DATA PROPERTY OF MAINTAINER CORPORATION OF IOWA, INC.

COPYRIGHT © 2001

LUDS DIMENSIONS ARE IN INCHES
GENERAL TOLERANCES

BREAK ALL EDGES .01 X 45°

ANGULAR ± 1°
.XX ± .03
.XXX ± .005

LUDS RADII

LUDS ANGLES

MADE IN THE USA

MATERIAL:

SCALE: 1:32

SIZE: B

DRAWING NUMBER: Y185-4

Maintainer
Corporation of Iowa, Inc.
P.O. Box 349 1701 S. 2nd Avenue
Sheldon, Iowa 51201

DFTM. KJB

DATE: 3-20-07

MTS-2-084 HOUSTON AUTOMOTIVE GROUP

PLEASE REPORT ANY ERRORS FOUND ON THIS PRINT