APPROVED BY _____ DATE _____ PAINT CODE PW7 BRIGHT WHITE

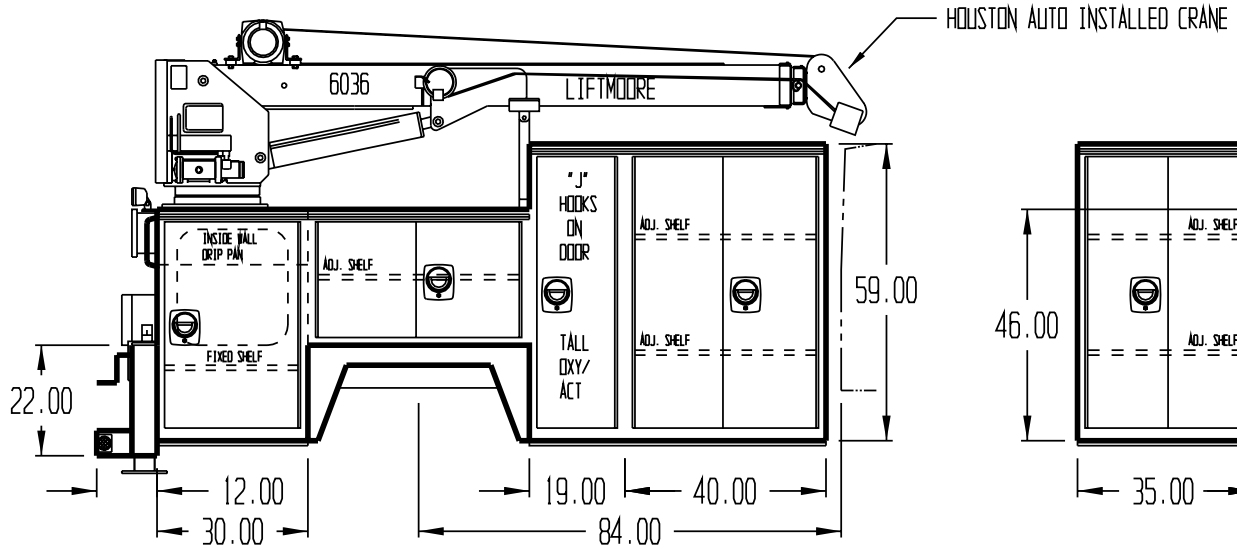

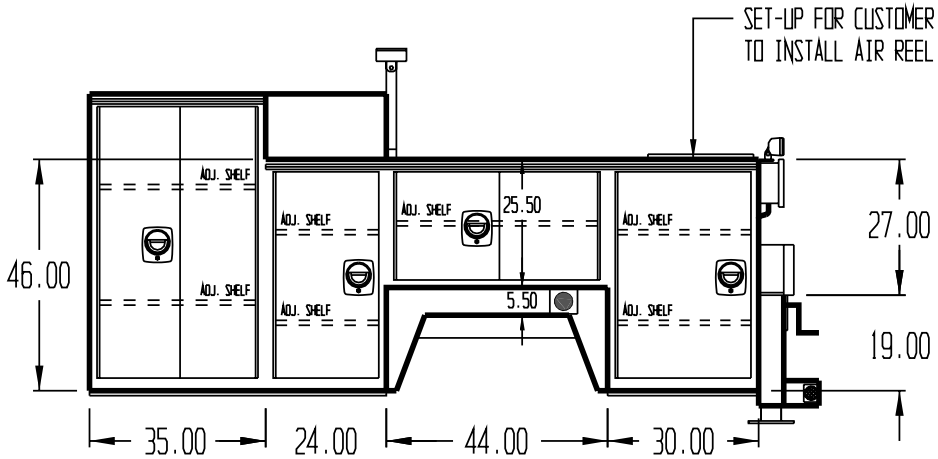

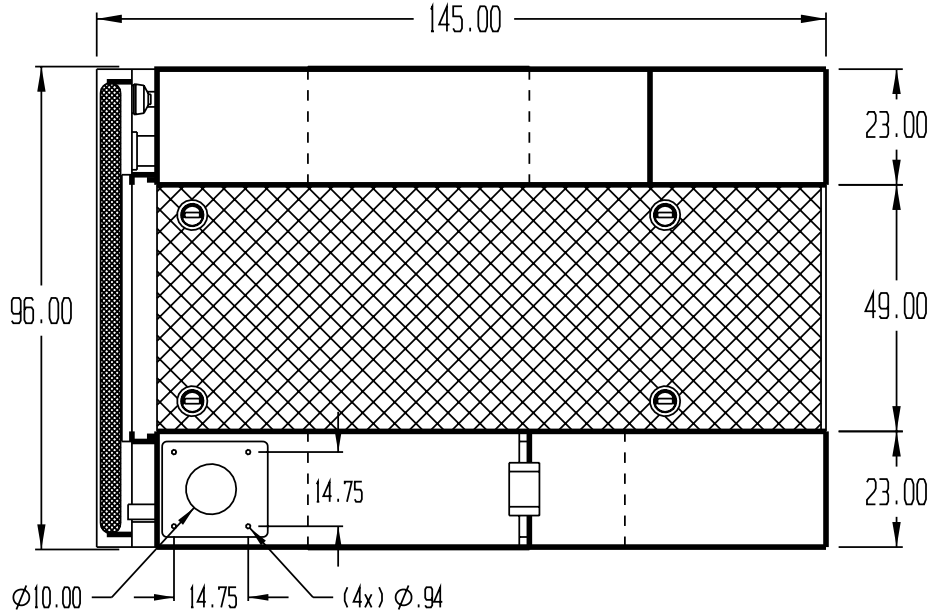

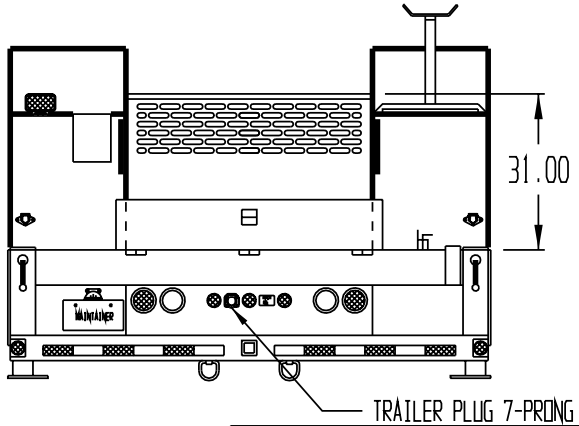

NOTE: PPG SPLATTER PAINT ON COMPARTMENT INTERIORS

NOTE:
PROTECTIVE SPRAY COVERING ON:
COMPARTMENT LOWER FRONTS

NOTE:
USABLE CENTER DECK
CARGO WIDTH 48.50"

PLEASE REPORT ANY ERRORS FOUND ON THIS PRINT

THIS PRINT CONTAINS CONFIDENTIAL INFORMATION AND IS THE SOLE PROPERTY OF MAINTAINER CORP. OF IOWA INC. AND IS NOT TO BE COPIED OR REPRODUCED WITHOUT THE EXPRESSED WRITTEN PERMISSION OF MAINTAINER CORP. OF IOWA INC.

PROPRIETARY DATA PROPERTY OF MAINTAINER CORPORATION OF IOWA, INC.

COPYRIGHT © 2002

UOS DIMENSIONS ARE IN INCHES
GENERAL TOLERANCES
BREAK ALL EDGES .01 X 45°
ANGULAR ± 1°
.XX ± .03
.XXX ± .005
UOS RADII
UOS ANGLES

MATERIAL:

SCALE: 1:26
SIZE: B

Maintainer
Corporation of Iowa, Inc.
P.O. Box 349 1701 S. 2nd Avenue
Sheldon, Iowa 51201

DRAWING NUMBER: AC203-206-2
DFTM. KLJ
DATE: 7/27/11

MADE IN THE USA

S84D HOUSTON AUTO. GROUP / STOCK