Digitally signed by Andy Winter
DN: CN = Andy Winter, C = US,
O = Houston Automotive Group,
Inc.
Date: 2007.08.08 18:53:20 -05'00'

APPROVED BY: _____ DATE: _____ PAINT CODE: __YZ FORD WHITE_____ WELDER TYPE: ___MILLER____

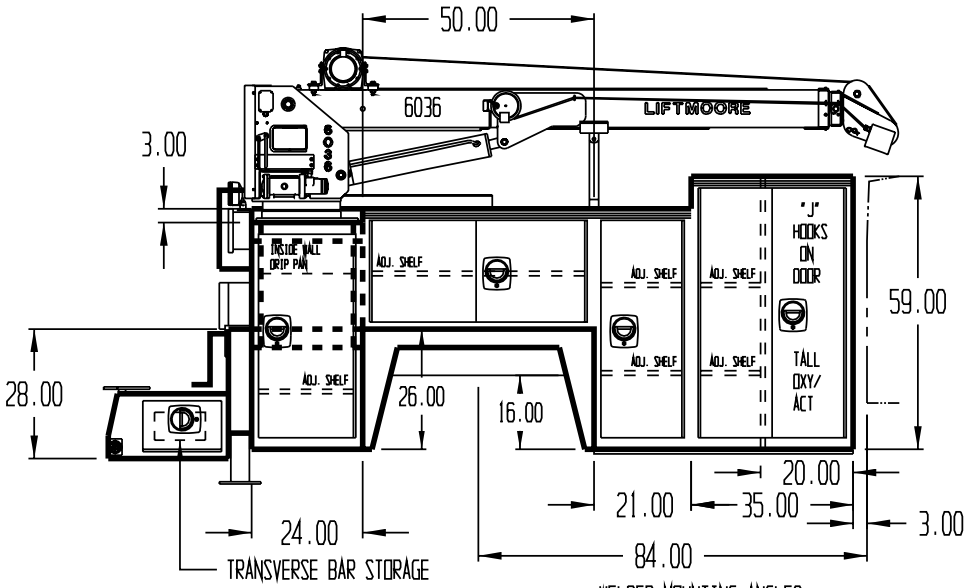

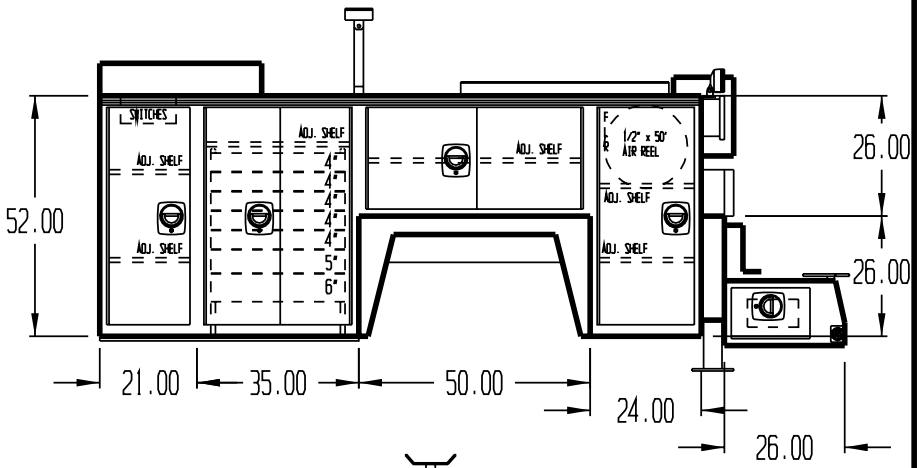

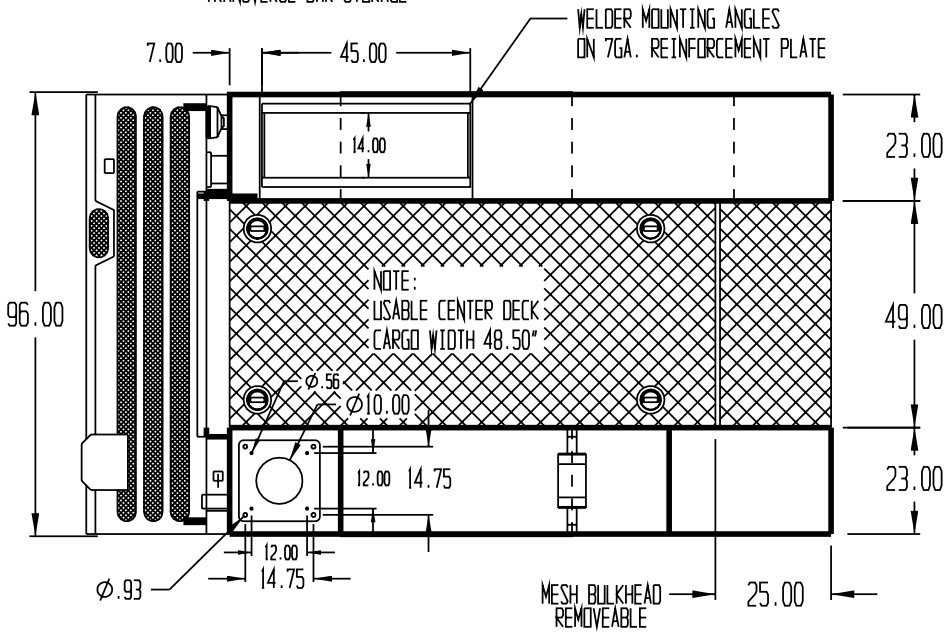

NOTE: 4" CROSSMEMBERS AND 6" MAINSILLS

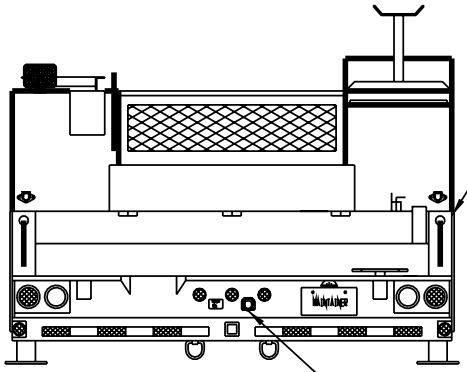

(Y419 & Y420)

PLEASE REPORT ANY ERRORS FOUND ON THIS PRINT

THIS PRINT CONTAINS CONFIDENTIAL INFORMATION AND IS THE SOLE PROPERTY OF MAINTAINER CORP. OF IOWA INC. AND IS NOT TO BE COPIED OR REPRODUCED WITHOUT THE EXPRESSED WRITTEN PERMISSION OF MAINTAINER CORP. OF IOWA INC.

PROPRIETARY DATA PROPERTY OF MAINTAINER CORPORATION OF IOWA, INC.

COPYRIGHT © 2001

UOS DIMENSIONS ARE IN INCHES
GENERAL TOLERANCES

BREAK ALL EDGES .01 X 45°

ANGULAR ± 1°
.XX ± .03
.XXX ± .005

UOS RADII

UOS ANGLES

MADE IN THE USA

MATERIAL:

SCALE: 1:32

SIZE: B

DRAWING NUMBER: Y419-1

DFTM. KJB

DATE: 8-8-07

1.5-084 HOUSTON AUTOMOTIVE GROUP 6137 & 6139

Maintainer
Corporation of Iowa, Inc.
P.O. Box 349 1701 S. 2nd Avenue
Sheldon, Iowa 51201